Shock Absorber

Series RB

Absorbing impact and noise

Dampening to meet the high speed requirements of the modern world.

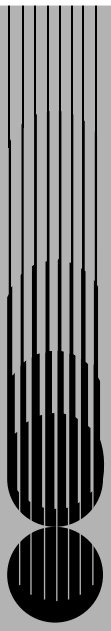

Shock absorber: Series RB
Coolant resistant type: Series RBL

Usable without a stopper nut
The strong body can be positioned directly.

Short type: Series RBQ



A compact style that has been shortened lengthwise

Allowable eccentric angle is 5°
Suitable for absorption of rotation energy.

Usable without a stopper nut
The strong body can be positioned directly.

Shock absorber

Automatic adjustment to the most appropriate absorption performance

Specially designed orifice can absorb energy comprehensively and most appropriately in many different applications. This ranges from high speed low loads, to load speed high loads; without requiring additional adjustment of the shock absorber.

Example of comparison for drag characteristics

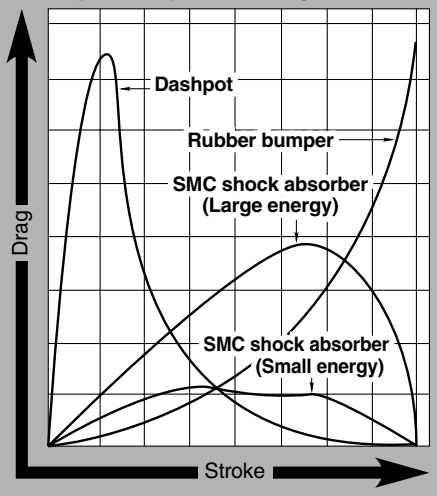

∗ Drag waveform will vary depending on the operating conditions.

RB

Series Variations

Series	Basic type	Thread O.D. size	With cap or bumper (Option)	Hexagon nut ∗	Stopper nut (Option)	Foot bracket	Page
Series RB 	Series RB	M6, M8, M10, M14, M20, M27	●	●	●	●	1677
		Optional specifications are not available for M6.					
	Coolant resistant Series RBL	M10, M14, M20, M27	●	●	●	●	1684
Series RBQ 	Series RBQ	M16, M20, M25, M30, M32	●	●	●		1688

∗ 2 Hexagon nuts are attached for Series RB and standard models RBQ.

D-□

-X□

Individual -X□

Shock Absorber
Series RB
Technical Data:

Model Selection

Model Selection Step

1. Type of impact

- ☐ Cylinder stroke at load (Horizontal)
- ☐ Cylinder stroke at load (Downward)
- ☐ Cylinder stroke at load (Upward)
- ☐ Conveyor stroke at load (Horizontal)
- ☐ Free horizontal impact
- ☐ Free dropping impact
- ☐ Rotating impact (With torque)

2. Enumeration of operating conditions

Symbol	Operating condition	Unit
m	Impacting object mass	kg
υ	Collision speed	m / sec
h	Dropping height	m
ω	Angle speed	rad/sec
R	Distance between axis of cylinder and impact point	m
d	Bore size	mm
p	Cylinder operating pressure	MPa
F	Thrust	N
T	Torque	N · m
n	Operation cycle	cycle / min
t	Ambient temperature	°C
μ	Friction coefficient	—

3. Specifications and operational instructions

Ensure that the collision speed, thrust, operation cycle, the ambient temperature and atmosphere fall within the specifications.

∗ Be aware of the min. installation radius in the case of rotating impacts.

4. Calculation of kinetic energy E_1

Using the equation suitable for the classification of impact.

In the case of cylinder stroke at load and free horizontal impact, substitute respective figures for **Data A** in order to calculate E_1.

5. Calculation of thrust energy E_2

Select any shock absorber as a provisional model.

In the case of thrust energy of cylinder E_1, substitute respective figures for **Data B** or **Data C**.

6. Calculation of corresponding mass of impacting object Me

Absorbed energy $E = E_1 + E_2$

Corresponding mass of impacting object $Me = \frac{2}{\upsilon^2} \cdot E$

Substitute both absorbed energy **E** and collision speed υ for **Data A** in order to calculate the corresponding mass of the impacting object **Me**.

7. Selection of applicable model

Taking into consideration the corresponding mass of the impacting object **Me**, calculated using **Data D** and collision speed υ, check provisional model compatibility with the condition of application. If this is satisfactory, then the said provisional model will be the applicable one.

Caution on Selection

In order for the shock absorbers to operate accurately for long hours, it is necessary to select a model that is well-suited to your operating conditions. If the impact energy is smaller than 5% of the maximum energy absorption, select a model that is one class smaller.

Selection Example

	Cylinder stroke at load (Horizontal)		
1. Type of impact	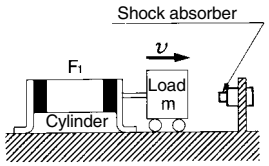		
Collision speed (1) **υ**	**υ**		
Kinetic energy E_1	$\frac{1}{2} \cdot m \cdot \upsilon^2$		
Thrust energy E_2	$F_1 \cdot S$		
Absorbed energy E	$E_1 + E_2$		
Corresponding (2) **mass of impacting object Me**	$\frac{2}{\upsilon^2} \cdot E$		
2. Operating conditions	**m** = 1 kg **υ** = 0.5 m/s **d** = 10 mm **p** = 0.5 MPa **n** = 30 cycle/min **t** = 25 °C	**2. Operating conditions**	**m** = 50 kg **υ** = 0.3 m/s **d** = 40 mm **p** = 0.5 MPa **n** = 20 cycle/min **t** = 25 °C
3. Specifications and operational instructions	● **Confirmation of specifications** **υ** ··· 0.5 < 1.0 (max.) **t** ··· –10 (min.) < 25 < 80 (max.) **F** ··· **F_1** ··· 39.3 < **YES**	**3. Specifications and operational instructions**	● **Confirmation of specifications** **υ** ··· 0.3 < 5 (max.) **t** ··· –10 (min.) < 25 < 80 (max.) **F** ··· **F_1** ···628 < 1961 (max.) **YES**
4. Calculation of kinetic energy E_1	● **Kinetic energy E_1** Use **Formula** to calculate **E_1**. Substitute 1.0 for **m** and 0.5 for **υ**. **$E_1 \cong 0.125$**	**4. Calculation of kinetic energy E_1**	● **Kinetic energy E_1** Use **Formula** to calculate **E_1**. Substitute 50 for **m** and 0.3 for **υ**. **$E_1 \cong 2.3$ J**
5. Calculation of thrust energy E_2	● **Thrust energy E_2** Provisionally select a model RB0604 and make the use of **Data B** at left. According to **d** = 10, **E_2** is obtained. **$E_2 \cong 0.157$**	**5. Calculation of thrust energy E_2**	● **Thrust energy E_2** Provisionally select a model RB2015 and make the use of **Data B**. According to **d** = 40, **E_2** is obtained. **$E_2 \cong 9.4$ J**
6. Calculation of corresponding mass of impacting object Me	● **Corresponding mass of impacting object Me** Use the **Formula** "Absorbed energy **E** = **E_1** + **E_2** = 0.282" to calculate **Me**. Substitute 0.282 for **E** and 0.5 for **υ**. **Me ≅ 2.3**	**6. Calculation of corresponding mass of impacting object Me**	● **Corresponding mass of impacting object Me** Use the formula "Absorbed energy **E** = **E_1** + **E_2** = 2.3 + 9.4 = 11.7 J" to calculate **Me**. Substitute 11.7 J for **E** and 0.3 for **υ**. **Me ≅ 260 kg**
7. Selection of RB0604	● **Selection of RB0604** RB0604 satisfies **Me** = 2.3 < 3 kg (Max. corresponding mass of impacting object). Ultimately, it will result in an operating frequency of 30 < 80, without causing a problem. **YES**	**7. Selection of applicable model**	● **Selection of applicable model** According to **Data D**, the tentatively selected RB2015 satisfies **Me** = 260 kg < 400 kg at **υ** = 0.3. Ultimately, it will result in an operating frequency of **n**···20 < 25, without causing a problem. **YES** **Select RB2015**

1. Type of Impact

Type of impact	Cylinder stroke at load (Downward)	Cylinder stroke at load (Upward)	Conveyor stroke at load (Horizontal)	Free dropping impact	Rotating impact (With torque)
	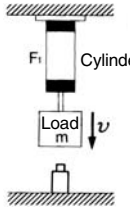	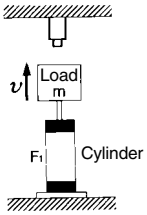	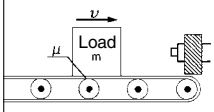	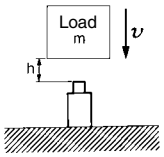	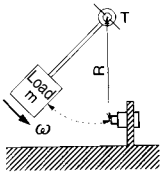
Collision speed (1) υ	υ	υ	υ	$\sqrt{2gh}$	$\omega \cdot R$
Kinetic energy E_1	$\frac{1}{2} \cdot m \cdot \upsilon^2$	$\frac{1}{2} \cdot m \cdot \upsilon^2$	$\frac{1}{2} \cdot m \cdot \upsilon^2$	$m \cdot g \cdot h$	$\frac{1}{2} \cdot m \cdot \omega^2$
Thrust energy E2	$F_1 \cdot S + m \cdot g \cdot S$	$F_1 \cdot S + m \cdot g \cdot S$	$m \cdot g \cdot \mu \cdot S$	$m \cdot g \cdot S$	$T \cdot \frac{S}{R}$
Absorbed energy E	$E_1 + E_2$	$E_1 + E_2$	$E_1 + E_2$	$E_1 + E_2$	$E_1 + E_2$
Corresponding (2) mass of impacting object Me	$\frac{2}{\upsilon^2} \cdot E$	$\frac{2}{\upsilon^2} \cdot E$	$\frac{2}{\upsilon^2} \cdot E$	$\frac{2}{\upsilon^2} \cdot E$	$\frac{2}{\upsilon^2} \cdot E$

Note 1) Collision speed is momentary velocity at which object is impacting against shock absorber. The collision speed is $\upsilon = 2\overline{\upsilon}$ when the speed (average speed $\overline{\upsilon}$) is calculated from the air cylinder's stroke time.

Note 2) An "Impact body equivalent mass" is the mass of an impact object without involving thrust, into which an object's total energy has been converted. Hence, $E = \frac{1}{2} \cdot Me \cdot \upsilon^2$

Note 3) For the formula of moment of inertia I (kg·m²), refer to the catalog of rotary actuator.

Data A

Kinetic Energy E_1 or Energy Absorption E

RB0604

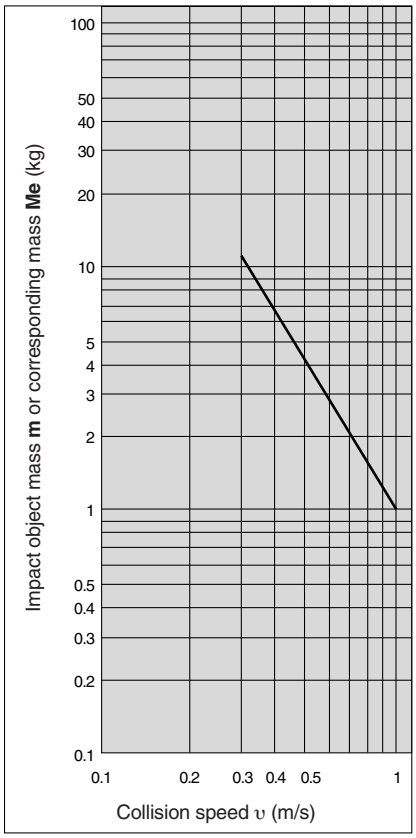

RB□0805 to 2725

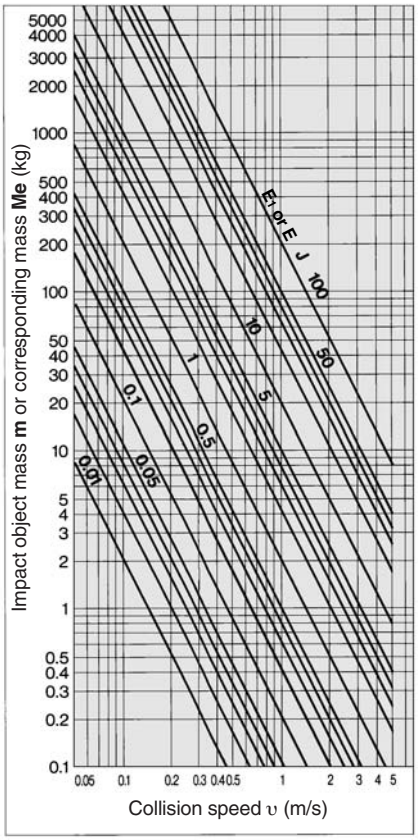

Symbol

Symbol	Specifications	Unit
d	Bore size	mm
E	Absorbed energy	J
E_1	Kinetic energy	J
E_2	Thrust energy	J
F_1	Cylinder thrust	N
g	Acceleration of gravity (9.8)	m / s²
h	Dropping height	m
I (3)	Moment of inertia around the center of gravity	kg · m²
n	Operating frequency	cycle / min
p	Cylinder operating pressure	MPa
R	Distance between axis of cylinder and impact point	m
S	Shock absorber stroke	m
T	Torque	N · m
t	Ambient temperature	°C
υ	Collision speed	m / s
m	Impact object mass	kg
Me	Corresponding mass of impact object	kg
ω	Angle speed	rad / s
μ	Friction coefficient	—

Data B

Thrust Energy of Cylinder $F_1 \cdot S$

(Operating pressure 0.5 MPa) (J)

Model		RB0604	RB□0805	RB□0806 RB□1006	RB□1007	RB□1411	RB□1412	RB□2015	RB□2725
Stroke absorption (mm)		4	5	6	7	11	12	15	25
Bore size d (mm)	6	0.057	0.071	0.085	0.099	0.156	0.170	0.212	0.353
	10	0.157	0.196	0.236	0.274	0.432	0.471	0.589	0.982
	15	0.353	0.442	0.530	0.619	0.972	1.06	1.33	2.21
	20	0.628	0.785	0.942	1.10	1.73	1.88	2.36	3.93
	25	0.981	1.23	1.47	1.72	2.70	2.95	3.68	6.14
	32	—	2.01	2.41	2.81	4.42	4.83	6.03	10.1
	40	—	3.14	3.77	4.40	6.91	7.54	9.42	15.7
	50	—	4.91	5.89	6.87	10.8	11.8	14.7	24.5
	63	—	7.79	9.35	10.9	17.1	18.7	23.4	39.0
	80	—	12.6	15.1	17.6	27.6	30.2	37.7	62.8
	100	—	19.6	23.6	27.5	43.2	47.1	58.9	98.2
	125	—	30.7	36.8	43.0	67.5	73.6	92.0	153
	140	—	38.5	46.2	53.9	84.7	92.4	115	192
	160	—	50.3	60.3	70.4	111	121	151	251
	180	—	63.6	76.3	89.1	140	153	191	318
	200	—	78.5	94.2	110	173	188	236	393
	250	—	123	147	172	270	295	368	614
	300	—	177	212	247	389	424	530	884

■ **Operating pressure other than 0.5 MPa: Multiply by the following coefficient.**

Operating pressure (MPa)	0.1	0.2	0.3	0.4	0.5	0.6	0.7	0.8	0.9
Coefficient	0.2	0.4	0.6	0.8	1.0	1.2	1.4	1.6	1.8

Data C

Thrust Energy at Load m·g·s

RB0604

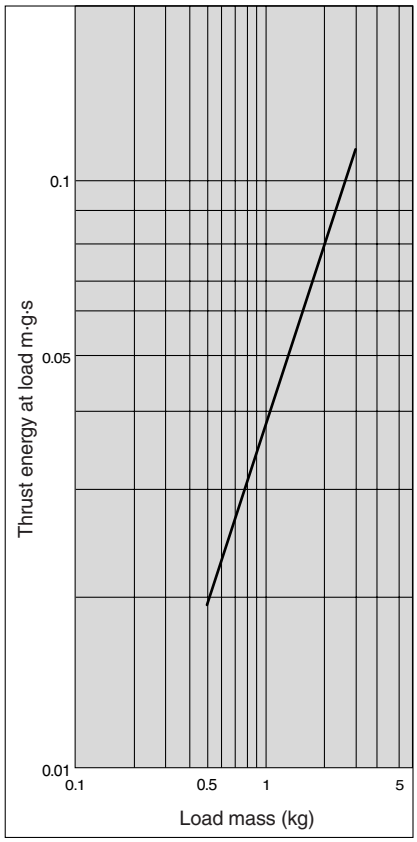

RB□0805 to 2725

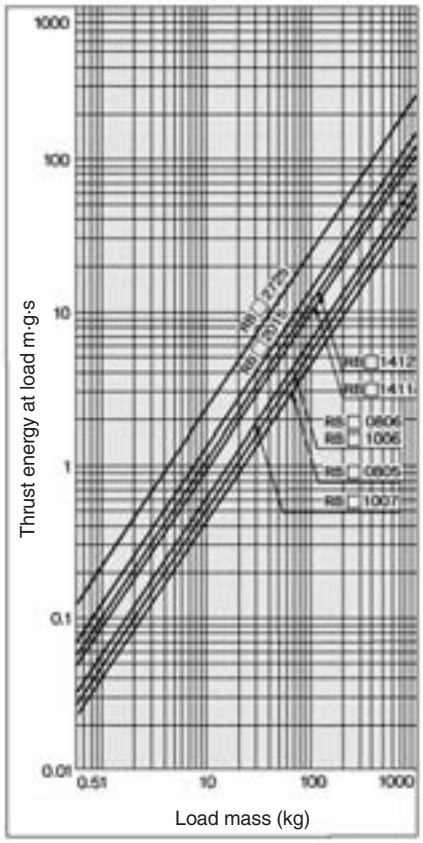

Data D

Corresponding Mass of Impacting Object Me

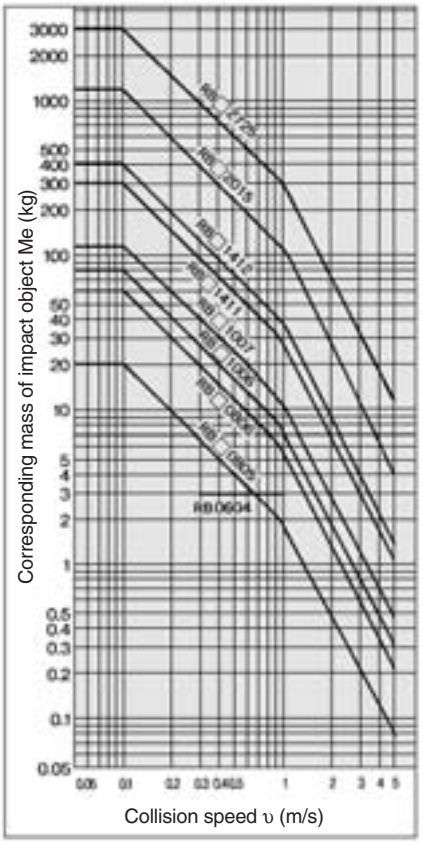

The graph of corresponding mass of impacting object: At room temperature (20 to 25°C)

Shock Absorber
Series RB

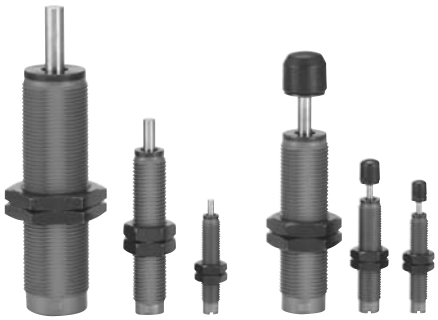

Basic type　　With cap

Specifications

Model / Specifications		RB0604	RB0805	RB0806	RB1006	RB1007	RB1411	RB1412	RB2015	RB2725
	Basic type	RB0604	RB0805	RB0806	RB1006	RB1007	RB1411	RB1412	RB2015	RB2725
	With cap	—	RBC0805	RBC0806	RBC1006	RBC1007	RBC1411	RBC1412	RBC2015	RBC2725
Max. energy absorption (J) Note 1)		0.5	0.98	2.94	3.92	5.88	14.7	19.6	58.8	147
Thread O.D. size		M6 x 0.75	M8 x 1.0		M10 x 1.0		M14 x 1.5		M20 x 1.5	M27 x 1.5
Stroke (mm)		4	5	6	6	7	11	12	15	25
Max. corresponding mass of impacting object (1) (kg)		3	—							
Collision speed (m/s)		0.3 to 1.0	0.05 to 5.0							
Max. operating frequency (2) (cycle/min)		80	80	80	70	70	45	45	25	10
Max. allowable thrust (N)		150	245	245	422	422	814	814	1961	2942
Ambient temperature range (°C)		–10 to 80 (No freezing)								
Spring force (N)	Extended	3.05	1.96	1.96	4.22	4.22	6.86	6.86	8.34	8.83
	Retracted	5.59	3.83	4.22	6.18	6.86	15.30	15.98	20.50	20.01
Mass (g)	Basic type	5.5	15	15	23	23	65	65	150	350
	With cap	—	16	16	25	25	70	70	165	400

Note 1) The maximum energy absorption, the maximum corresponding mass of impacting object and maximum operating frequency are measured at room temperature (20 to 25°C).
Note 2) It denotes the values at the maximum energy absorption per one cycle.
Max. operating frequency can increase in proportion to energy absorption.

How to Order

RB C 14 12 ☐

Shock absorber

Type

Nil	Basic type
C	With cap

O.D. thread size/Stroke

Symbol	O.D. thread size	Stroke	Symbol	O.D. thread size	Stroke
0604	6 mm	4 mm	1411	14 mm	11 mm
0805	8 mm	5 mm	1412	14 mm	12 mm
0806	8 mm	6 mm	2015	20 mm	15 mm
1006	10 mm	6 mm	2725	27 mm	25 mm
1007	10 mm	7 mm			

Note) RB0604: With cap type is not available.

Option

Symbol	Hex. nut	Stopper nut
Nil	2 pcs.	—
J	3 pcs.	—
N	—	—
S	2 pcs.	1 pc.
SJ	3 pcs.	1 pc.
SN	—	1 pc.

Note) RB0604: "Nil" or "N" only

Replacement part no./Cap (Resin part only)

RBC 08 C

Applicable model

08	RBC0805, 0806	20	RBC2015
10	RBC1006, 1007	27	RBC2725
14	RBC1411, 1412		

Cap

Cap cannot be mounted for basic type. Please place an order with cap type from the beginning.

D-☐
-X☐
Individual -X☐

Construction

RB0604

Extended

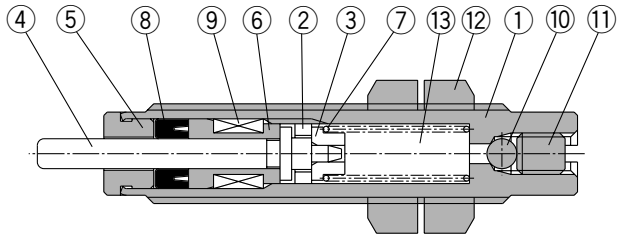

Compressed

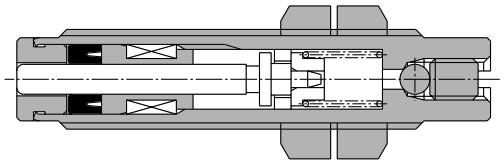

Component Parts

No.	Description	Material	Treatment
1	**Outer tube**	Free-cutting steel	Nitriding
2	**Piston**	Copper alloy	—
3	**Spring guide**	Stainless steel	—
4	**Piston rod**	Carbon steel	Nitriding
5	**Stopper**	Stainless steel	—
6	**Bearing**	Copper alloy	—
7	**Return spring**	Piano wire	Zinc trivalent chromated
8	**Rod seal**	NBR	—
9	**Accumulator**	NBR	Foam rubber
10	**Steel ball**	Bearing steel	—
11	**Hexagon socket head cap screw**	Special steel	Nickel plated
12	**Hexagon nut**	Carbon steel	Nickel plated
13	**Operating oil**	Mineral oil	—

RB□0805 to 2725

Extended

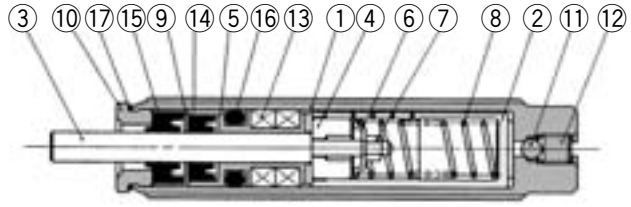

Compressed



Component Parts

No.	Description	Material	Treatment
1	**Outer tube**	Rolled steel	Gray coated
2	**Inner tube**	Special steel	Heat treated
3	**Piston rod**	Special steel	Electroless nickel plated
4	**Piston**	Special steel	Heat treated
5	**Bearing**	Special bearing material	
6	**Spring guide**	Carbon steel	Zinc chromated
7	**Lock ring**	Copper	
8	**Return spring**	Piano wire	Zinc chromated
9	**Seal holder**	Copper alloy	
10	**Stopper**	Carbon steel	Zinc chromated
11	**Steel ball**	Bearing steel	
12	**Set screw**	Special steel	
13	**Accumulator**	NBR	Foam rubber
14	**Rod seal**	NBR	
15	**Scraper**	NBR	
16	**Gasket**	NBR	
17	**Gasket**	NBR	Only RB(C)2015, 2725

Dimensions

RB0604

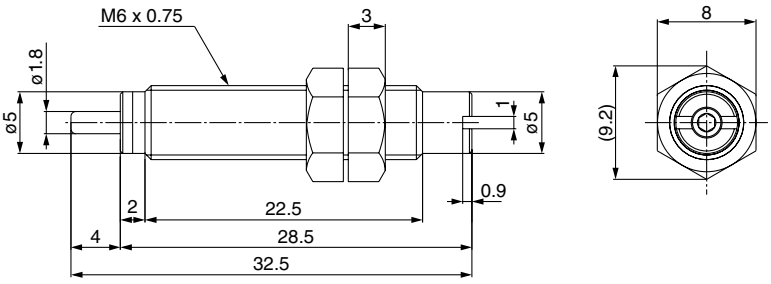

Hexagon Nut
(2 pcs. standard equipment)

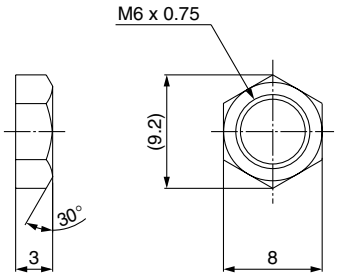

Basic type: RB0805, RB0806, RB1006, RB1007

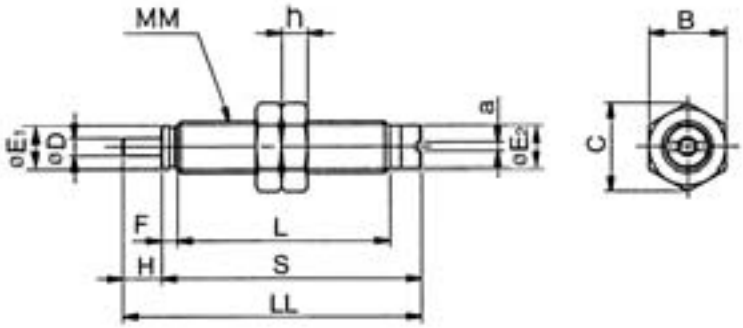

With cap: RBC0805, RBC0806 RBC1006, RBC1007

∗ Other dimensions are the same as the basic type.

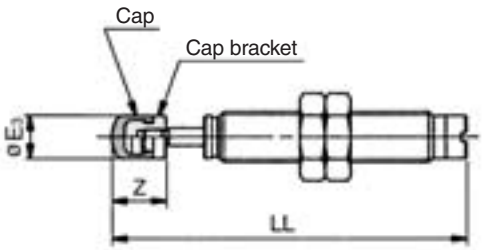

Model		Basic type dimensions										With cap ∗			Hexagon nut		
Basic type	With cap	D	E_1	E_2	F	H	a	L	LL	MM	S	E_3	LL	Z	B	C	h
RB0805	**RBC0805**	2.8	6.8	6.8	2.4	5	1.4	33.4	45.8	M8 x 1.0	40.8	6.8	54.3	8.5	12	13.9	4
RB0806	**RBC0806**	2.8	6.8	6.8	2.4	6	1.4	33.4	46.8	M8 x 1.0	40.8	6.8	55.3	8.5	12	13.9	4
RB1006	**RBC1006**	3	8.8	8.6	2.7	6	1.4	39	52.7	M10 x 1.0	46.7	8.7	62.7	10	14	16.2	4
RB1007	**RBC1007**	3	8.8	8.6	2.7	7	1.4	39	53.7	M10 x 1.0	46.7	8.7	63.7	10	14	16.2	4

Basic type: RB1411, RB1412, RB2015, RB2725

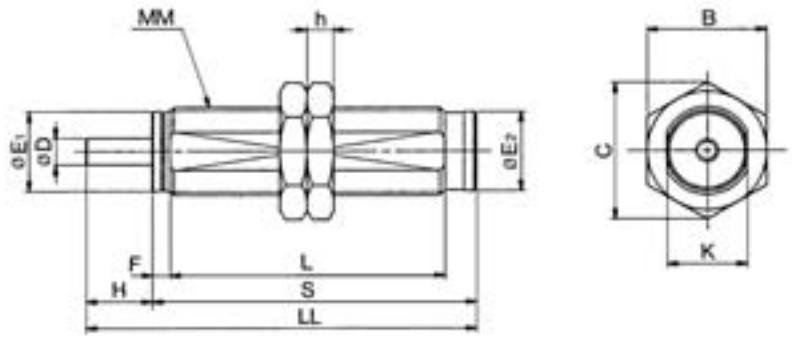

With cap: RBC1411, RBC1412 RBC2015, RBC2725

∗ Other dimensions are the same as the basic type.

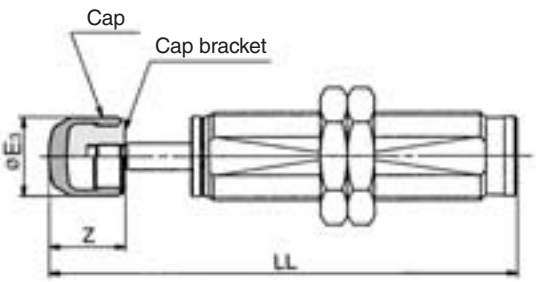

Model		Basic type dimensions										With cap ∗			Hexagon nut		
Basic type	With cap	D	E_1	E_2	F	H	K	L	LL	MM	S	E_3	LL	Z	B	C	h
RB1411	**RBC1411**	5	12.2	12	3.5	11	12	58.8	78.3	M14 x 1.5	67.3	12	91.8	13.5	19	21.9	6
RB1412	**RBC1412**	5	12.2	12	3.5	12	12	58.8	79.3	M14 x 1.5	67.3	12	92.8	13.5	19	21.9	6
RB2015	**RBC2015**	6	18.2	18	4	15	18	62.2	88.2	M20 x 1.5	73.2	18	105.2	17	27	31.2	6
RB2725	**RBC2725**	8	25.2	25	5	25	25	86	124	M27 x 1.5	99	25	147	23	36	41.6	6

Hexagon Nut

(2 pcs. standard equipment)

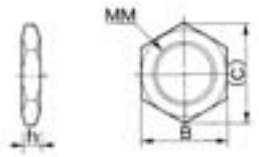

Part no.	Dimensions			
	MM	h	B	C
RB06J	M6 x 0.75	3	8	9.2
RB08J	M8 x 1.0	4	12	13.9
RB10J	M10 x 1.0	4	14	16.2
RB14J	M14 x 1.5	6	19	21.9
RB20J	M20 x 1.5	6	27	31.2
RB27J	M27 x 1.5	6	36	41.6

Option

Stopper nut

For basic type

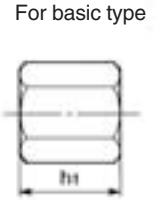

For cap type

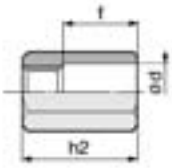

Part no.		Dimensions						
Basic type	With cap	B	C	h1	h2	MM	d	f
RB08S	RBC08S	12	13.9	6.5	23	M8 x 1.0	9	15
RB10S	RBC10S	14	16.2	8	23	M10 x 1.0	11	15
RB14S	RBC14S	19	21.9	11	31	M14 x 1.5	15	20
RB20S	RBC20S	27	31.2	16	40	M20 x 1.5	23	25
RB27S	RBC27S	36	41.6	22	51	M27 x 1.5	32	33

Replacement Parts

Cap

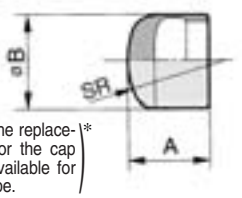

These are the replacement part for the cap type. Not available for the basic type. *

Material: Polyurethane

Part no.	Dimensions		
	A	B	SR
RBC08C	6.5	6.8	6
RBC10C	9	8.7	7.5
RBC14C	12.5	12	10
RBC20C	16	18	20
RBC27C	21	25	25

Foot Bracket for Shock Absorber

Available for the foot mounting bracket of Series RB.



Part no.

Part no.	Applicable absorber
RB08-X331	RB□0805, 0806
RB10-X331	RB□1006, 1007
RB14-X331	RB□1411, 1412
RB20-X331	RB□2015
RB27-X331	RB□2725

* Order foot brackets separately.

Dimensions

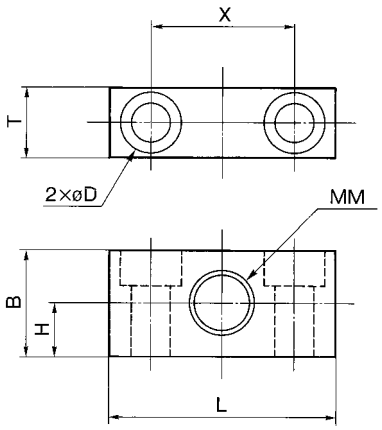

Part no.	B	D	H	L	MM	T	X	Mounting bolt
RB08-X331	15	4.5 drill, 8 counterbore depth 4.4	7.5	32	M8 x 1.0	10	20	M4
RB10-X331	19	5.5 drill, 9.5 counterbore depth 5.4	9.5	40	M10 x 1.0	12	25	M5
RB14-X331	25	9 drill, 14 counterbore depth 8.6	12.5	54	M14 x 1.5	16	34	M8
RB20-X331	38	11 drill, 17.5 counterbore depth 10.8	19	70	M20 x 1.5	22	44	M10
RB27-X331	50	13.5 drill, 20 counterbore depth 13	25	80	M27 x 1.5	34	52	M12

Series RB
Specific Product Precautions 1

Be sure to read before handling.
Refer to front matters 42 and 43 for Safety Instructions.

Selection

⚠ Danger

1. Energy absorption

Select a model so that the aggregated energy of impact object should not exceed the maximum absorption energy. Otherwise, it could cause changes in properties or result in damaging the shock absorber.

2. Corresponding mass of impacting object

Make a model selection, so that the corresponding mass of impacting object does not exceed the allowable range. Pulsation will occur in buffer and deceleration force, thus making it difficult to absorb shock smoothly.

3. Collision speed

Use it in the conditions that collision speed is within the specified range. It could cause the changes in buffer characteristics or lead to damage a shock absorber.

⚠ Warning

1. Static load

Design the system, so that any other forces than the buffer capacity or impacts should not be applied to the piston rod which is stopped at the retracted state.

⚠ Caution

1. Maximum operating frequency

Design the system in the conditions under which it is not used at the frequency exceeding the specified maximum operating frequency. (But, the maximum operating frequency will vary depending on the absorbed energy.)

2. Stroke

The maximum absorption energy in the specifications cannot be exerted unless the full stroke is used for both Series RB and RBL.

3. Work surface of an impact object

The contact surface of the impact object with which the piston rod comes into contact must be highly rigid.

In the case without a cap, a high surface compression load is applied to the contact surface of the impact body with which the piston rod comes into contact. Therefore, the contact surface must be highly rigid (hardness of HRC35 or more).

4. Be aware of the return force of the impact object.

If used in a conveyor drive, after the shock absorber has absorbed energy, it could be pushed back by the spring that is built-in. For the spring force in the specifications, refer to the column (page 1677).

5. Selection of size

As the number of operation proceeds, the maximum absorption energy of shock absorbers will be decreased by the following reasons such as abrasion, or deterioration, etc. of the internal working fluid. Taking this into consideration, selecting a size which is 20 to 40% affordable against the amount of absorption energy is recommended.

6. Drag characteristics

In general, the values of drag (reactive force generated during operation) generated by the operating speed will vary in hydraulic shock absorber. And then, by adopting “Porous orifice construction”, the RB series can adapt to such this fast/slow speed and can absorb shock smoothly in a wide range of speed.

But, the speed reduction (speed reduction G) would be larger around the stroke terminal, depending upon the operating conditions. Please note that it might be encountered that stroke time is long, motion is not smooth, etc. If this would be a problem, we recommend that stroke amount should be restricted by using our optional component like “Stopper nut”, etc.

⚠ Caution

7. Parallel usage

When using multiple shock absorbers in parallel, energy will not be divided evenly because of differences in product dimensions and devices. For this reason, select the following options.

E = Ea/N/0.6

E : Energy used per shock absorber

Ea: All energies

N : The number of shock absorbers used in parallel

Operating Environment

⚠ Danger

1. Operation in an environment which requires explosion-proof

- When mounting in places where static electricity is accumulated, implement a distribution of electrical energy by grounding.
- Do not use the materials for buffer face which might cause to spark by collision.

⚠ Warning

1. Pressure

Do not use it in the vacuum state, which is substantially different from the atmospheric pressure (above sea level) and in the atmosphere under being pressurized.

2. Using inside a clean room

Do not use the shock absorber in a clean room, as it could contaminate the clean room.

⚠ Caution

1. Temperature range

Do not use it, exceeding the specified allowable temperature range. Seal could be softened or hardened or worn out, or leading to leak a working fluid, deterioration, or impact characteristic changes.

2. Deterioration by atmosphere

Do not use the product in an environment where the product may be damaged by salt or air which contains organic solvent, phosphoester operating oil, sulfurous acid gas, chlorine gas or other acids. It may deteriorate seals or corrode metals.

3. Deterioration by ozone

Do not use it under the direct sunlight on the beach, or by the mercury lamp, or the ozone generator, because the rubber material will be deteriorated by ozone.

4. Cutting oil, water, blown dust

Do not use the product under the condition, where the liquid such as cutting oil, water, solvent, etc. is exposed either directly or in atomized form to the piston rod, or where blown dust could be adhered around the piston rod. This could cause malfunction.

Series RB
Specific Product Precautions 2

Be sure to read before handling.
Refer to front matters 42 and 43 for Safety Instructions.

Operating Environment

⚠ Caution

5. Vibration

When vibrations are applied on impact objects, implement a secure guide on impact objects.

Mounting

⚠ Warning

1. Before performing installation, removal, or stroke adjustment, make sure to cut the power supply to the equipment and verify that the equipment has stopped.

2. Installation of protective cover

We recommend the protective cover should be installed in the case workers might be getting close during the operation.

3. The rigidity of the mounting frame

The mounting frame must have sufficient rigidity.

Load on mounting plate can be calculated as follows.

$$\text{Load on mounting plate} \quad N \cong 2\,\frac{\text{E (Absorbed energy : J)}}{\text{S (Stroke : m)}}$$

Depending on the impact conditions, a load applied to the mounting frame may exceed the calculated value.

When setting the rigidity of the mounting frame, the sufficient safety ration must be taken into account in the calculated value.

⚠ Caution

1. Tightening torque of mounting nut should be as follows.

When threading on a mounting frame in order to mount a shock absorber directly, prepared hole dimensions are referred to the table below.

For tightening torque of a nut for shock absorber, kindly abide by the table below.

If the tightening torque that is applied to the nut exceeds the value given below, the shock absorber itself could become damaged.

Model	RB0604
O.D. thread (mm)	M6 x 0.75
Thread prepared bore (mm)	ø5.3 $^{+0.1}_{0}$
Tightening torque (N · m)	0.85

Model	RB(C)0805 RB(C)0806	RB(C)1006 RB(C)1007	RB(C)1411 RB(C)1412	RB(C)2015	RB(C)2725
O.D. thread (mm)	M8 x 1.0	M10 x 1.0	M14 x 1.5	M20 x 1.5	M27 x 1.5
Thread prepared bore (mm)	ø7.1 $^{+0.1}_{0}$	ø9.1 $^{+0.1}_{0}$	ø12.7 $^{+0.1}_{0}$	ø18.7 $^{+0.1}_{0}$	ø25.7 $^{+0.1}_{0}$
Tightening torque (N · m)	1.67	3.14	10.8	23.5	62.8

Mounting

⚠ Caution

2. Deviation of impact

The installation must be designed so that the impact body is perpendicular to the shock absorber's axial center. An angle of deviation that exceeds 3° will place an excessive load on the bearings, leading to oil leaks within a short period of operation.

Allowable eccentric angle $\theta_1 \leq 3°$

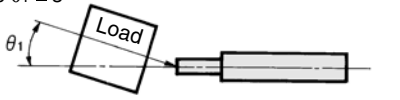

With cap $\theta_1 \leq 1°$

3. Rotating angle

If rotating impacts are involved, the installation must be designed so that the direction in which the load is applied is perpendicular to the shock absorber's axial center. The allowable rotating angle until the stroke end must be $\theta_2 \leq 3°$.

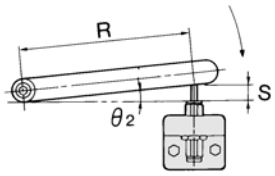

Allowable rotating eccentric angle $\theta_2 \leq 3°$

Installation Conditions for Rotating Impact (mm)

Model	S (Stroke)	θ2 (Allowable rotating angle)	R (Min. installation radius)	
			Basic type	With cap
RB0604	4	3°	76	—
RB□□0805	5		96	258
RB□□0806	6		115	277
RB□□1006	6		115	306
RB□□1007	7		134	325
RB□□1411	11		210	468
RB□□1412	12		229	487
RB□□2015	15		287	611
RB□□2725	25		478	916

4. Do not scratch the sliding portion of the piston rod or the outside threads of the outer tube.

Failure to observe this precaution could scratch or gouge the sliding potion of the piston rod, or damage the seals, which could lead to oil leakage and malfunction. Furthermore, damage to outside threaded portion of the outer tube could prevent the shock absorber from being mounted onto the frame, or its internal components could deform, leading to a malfunction.

5. Never turn the screw on the bottom of the body.

This is not an adjusting screw. Turning it could result in oil leakage.

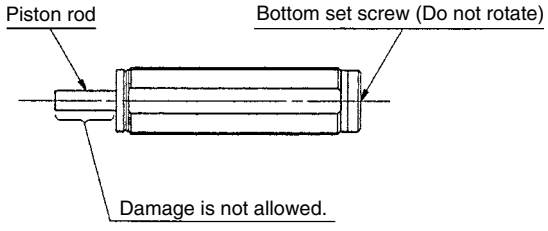

Series RB
Specific Product Precautions 3

Be sure to read before handling.
Refer to front matters 42 and 43 for Safety Instructions.

Mounting

⚠ Caution

6. Adjust the stopping time through the use of the stopper nut, as follows:

Control the stopping time of the impact object by turning the stopper nut in or out (thus changing length "a"). After establishing the stopper nut position, use a hexagon nut to secure the stopper nut in place.

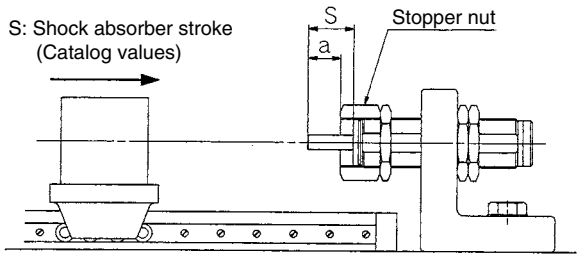

Maintenance

⚠ Caution

1. Check the mounting nut is not loosen.

The shock absorber could become damaged if it is used in a loose state.

2. Pay attention to any abnormal impact sounds or vibrations.

If the impact sounds or vibrations have become abnormally high, the shock absorber may have reached the end of its service life. If this is the case, replace the shock absorber. If use is continued in this state, it could lead to equipment damage.

3. Confirm that abnormality, oil leakage, etc. in the outward surface.

When a large amount of oil is leaking, replace the product, because it is believed to be happening something wrong with it. If it keeps on using, it may cause to break the equipment which is mounted by this product.

4. Inspect the cap for any cracks or wear.

If the shock absorber comes with a cap, the cap could wear first. To prevent damage to the impact object, replace the cap often.

Storage

⚠ Caution

1. Piston rod position while stored

If a piston rod is stored as pushed in for a long period of time (over 30 days), absorption capacity may decrease.
Avoid storing like this for a long time.

Service Life and Replacement Period of Shock Absorber

⚠ Caution

1. Allowable operating cycle under the specifications set in this catalog is shown below.

1.2 million cycles	RB0604, RB08□□
2 million cycles	RB10□□ to RB2725
1 million cycles	RBA□□□□, RBL□□□□

Note) Specified service life (suitable replacement period) is the value at room temperature (20 to 25°C). The period may vary depending on the temperature and other conditions. In some cases the absorber may need to be replaced before the allowable operating cycle above.

Shock Absorber: Coolant Resistant Type

Series RBL

Can be operated in an environments exposed to non-water soluble cutting oil. (Mainly JIS Class 1 equivalent)

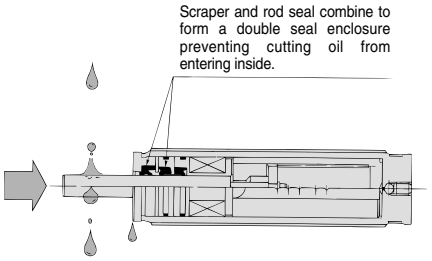



Basic type　　With cap

Specifications

Model / Specifications	Basic type	RBL1006	RBL1007	RBL1411	RBL1412	RBL2015	RBL2725
	With cap	RBLC1006	RBLC1007	RBLC1411	RBLC1412	RBLC2015	RBLC2725
Max. energy absorption (J) (1)		3.92	5.88	14.7	19.6	58.8	147
Thread O.D. size		M10 x 1.0		M14 x 1.5		M20 x 1.5	M27 x 1.5
Stroke absorption (mm)		6	7	11	12	15	25
Collision speed (m/s)		0.05 to 5					
Max. operating frequency (2) (cycle/min)		70	70	45	45	25	10
Max. allowable thrust (N)		422	422	814	814	1961	2942
Ambient temperature range (°C)		–10 to 80					
Effective atmosphere		Non-water soluble cutting oil					
Spring force (N)	Extended	4.22	4.22	8.73	8.73	11.57	22.16
	Retracted	6.18	6.86	14.12	14.61	17.65	38.05
Mass (g)	Basic type	26	26	70	70	150	365
	With cap	28	28	75	75	165	410

Note 1) The maximum energy absorption and maximum operating frequency are measured at room temperature (20 to 25°C).
Note 2) It denotes the values at the maximum energy absorption per one cycle. Max. operating frequency can increase in proportion to energy absorption.

How to Order

RB L C 14 12 ☐

- **RB**: Shock absorber
- **L**: Coolant resistant type
- **C**: Type

Nil	Basic type
C	With cap

- **14 12**: O.D. thread size/Stroke

Symbol	O.D. thread size	Stroke	Symbol	O.D. thread size	Stroke
1006	10 mm	6 mm	1412	14 mm	12 mm
1007	10 mm	7 mm	2015	20 mm	15 mm
1411	14 mm	11 mm	2725	27 mm	25 mm

- **☐**: Option

Symbol	Hex. nut	Stopper nut
Nil	2 pcs.	—
J	3 pcs.	—
N	—	—
S	2 pcs.	1 pc.
SJ	3 pcs.	1 pc.
SN	—	1 pc.

Replacement part no./ Cap (Resin part only) **RBC 10 C**

- **10**: Applicable model

10	RBLC1006, 1007	20	RBLC2015
14	RBLC1411, 1412	27	RBLC2725

- **C**: Cap

Cap cannot be mounted for basic type.
Please place an order with cap type from the beginning.

Construction

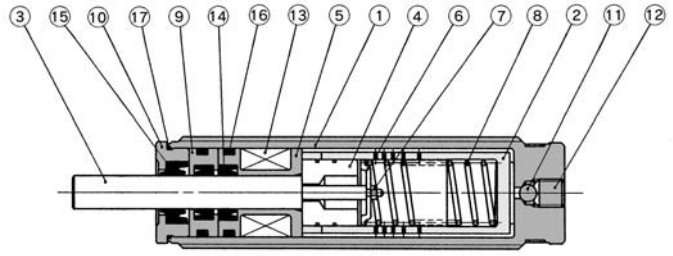

Component Parts

No.	Description	Material	Treatment
1	Outer tube	Rolled steel	Gray coated
2	Inner tube	Special steel	Heat treated
3	Piston rod	Special steel	Electroless nickel plated
4	Piston	Special steel	Heat treated
5	Bearing	Special bearing material	
6	Spring guide	Carbon steel	Zinc chromated
7	Lock ring	Copper	
8	Return spring	Piano wire	Zinc chromated
9	Seal holder	Copper alloy	
10	Stopper	Carbon steel	Zinc chromated
11	Steel ball	Bearing steel	
12	Set screw	Special steel	
13	Accumulator	NBR	Foam rubber
14	Rod seal	NBR	
15	Scraper	NBR	
16	Gasket	NBR	
17	Gasket	NBR	Only RBL(C)2015, 2725

Dimensions

Basic type: RBL1006, RBL1007

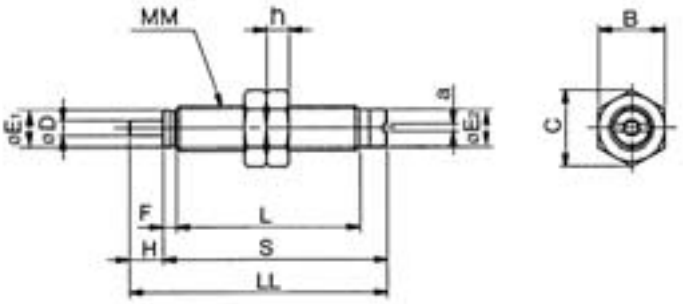

With cap: RBLC1006, RBLC1007

∗ Other dimensions are the same as the basic type.

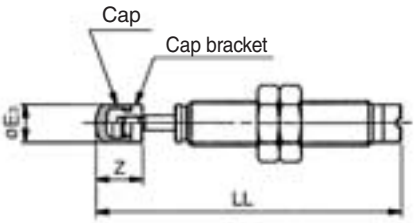

Model		Basic type dimensions										With cap ∗			Hexagon nut		
Basic type	With cap	D	E_1	E_2	F	H	a	L	LL	MM	S	E_3	LL	Z	B	C	h
RBL1006	**RBLC1006**	3	8.8	8.6	2.7	6	1.4	43.8	57.5	M10 x 1.0	51.5	8.7	67.5	10	14	16.2	4
RBL1007	**RBLC1007**	3	8.8	8.6	2.7	7	1.4	43.8	58.5	M10 x 1.0	51.5	8.7	68.5	10	14	16.2	4

Note) L, LL and S dimensions of RBL(C)1007/1006 are different from those of RB(C)1007/1006.

Basic type: RBL1411·RBL1412·RBL2015·RBL2725

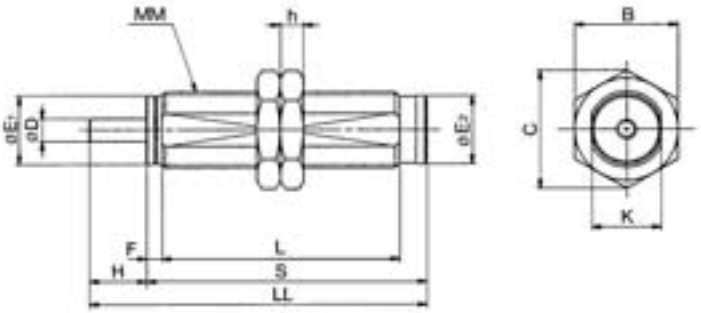

With cap: RBLC1411·RBLC1412 RBLC2015·RBLC2725

∗ Other dimensions are the same as the basic type.

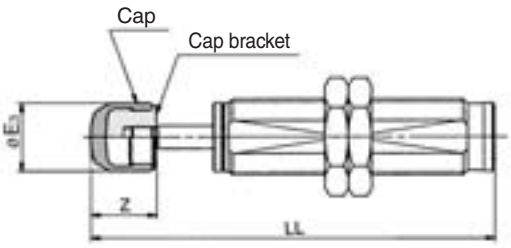

Model		Basic type dimensions										With cap*			Hexagon nut		
Basic type	With cap	D	E_1	E_2	F	H	K	L	LL	MM	S	E_3	LL	Z	B	C	h
RBL1411	**RBLC1411**	5	12.2	12	3.5	11	12	63.6	83.1	M14 x 1.5	72.1	12	96.6	13.5	19	21.9	6
RBL1412	**RBLC1412**	5	12.2	12	3.5	12	12	63.6	84.1	M14 x 1.5	72.1	12	97.6	13.5	19	21.9	6
RBL2015	**RBLC2015**	6	18.2	18	4	15	18	62.2	88.2	M20 x 1.5	73.2	18	105.2	17	27	31.2	6
RBL2725	**RBLC2725**	8	25.2	25	5	25	25	91.5	129.5	M27 x 1.5	104.5	25	152.5	23	36	41.6	6

Note) L, LL and S dimensions are different from those of RB(C) (except RBL(C)2015).

Hexagon Nut

(2 pcs. standard equipment)

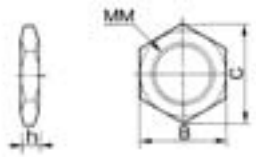

Part no.	Dimensions			
	MM	h	B	C
RB10J	M10 x 1.0	4	14	16.2
RB14J	M14 x 1.5	6	19	21.9
RB20J	M20 x 1.5	6	27	31.2
RB27J	M27 x 1.5	6	36	41.6

Option

Stopper nut

For basic type

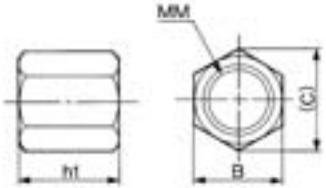

For cap type

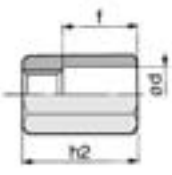

Part no.		Dimensions						
Basic type	With cap	B	C	h1	h2	MM	d	f
RB10S	**RBC10S**	14	16.2	8	23	M10 x 1.0	11	15
RB14S	**RBC14S**	19	21.9	11	31	M14 x 1.5	15	20
RB20S	**RBC20S**	27	31.2	16	40	M20 x 1.5	23	25
RB27S	**RBC27S**	36	41.6	22	51	M27 x 1.5	32	33

Replacement Parts

Cap

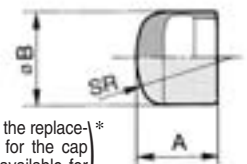

∗ These are the replacement part for the cap type. Not available for the basic type.

Material: Polyurethane

Part no.	Dimensions		
	A	B	SR
RBC10C	9	8.7	7.5
RBC14C	12.5	12	10
RBC20C	16	18	20
RBC27C	21	25	25

Foot Bracket for Shock Absorber

Available for the foot mounting bracket of Series RBL.



Part no.

Part no.	Applicable absorber
RB08-X331	**RB□0805, 0806**
RB10-X331	**RB□1006, 1007**
RB14-X331	**RB□1411, 1412**
RB20-X331	**RB□2015**
RB27-X331	**RB□2725**

∗ Order foot brackets separately.

Dimensions

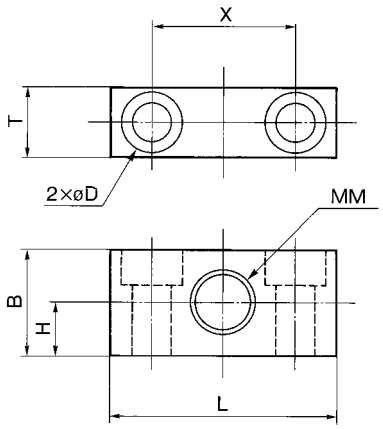

Part no.	B	D	H	L	MM	T	X	Mounting bolt
RB08-X331	15	4.5 drill, 8 counterbore depth 4.4	7.5	32	M8 x 1.0	10	20	M4
RB10-X331	19	5.5 drill, 9.5 counterbore depth 5.4	9.5	40	M10 x 1.0	12	25	M5
RB14-X331	25	9 drill, 14 counterbore depth 8.6	12.5	54	M14 x 1.5	16	34	M8
RB20-X331	38	11 drill, 17.5 counterbore depth 10.8	19	70	M20 x 1.5	22	44	M10
RB27-X331	50	13.5 drill, 20 counterbore depth 13	25	80	M27 x 1.5	34	52	M12

Shock Absorber: Short Type
Series RBQ

Allowable eccentric angle is 5°

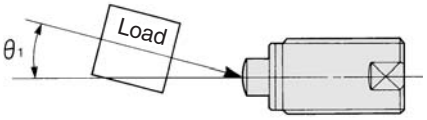

Allowable eccentic angle $\theta_1 \leq 5°$

Ideal for absorption of rotating energy



With bumper Series RBQC **Basic type Series RBQ**

Specifications

Model / Specifications		RBQ1604 / RBQC1604	RBQ2007 / RBQC2007	RBQ2508 / RBQC2508	RBQ3009 / RBQC3009	RBQ3213 / RBQC3213
Max. energy absorption (J) (1)		1.96	11.8	19.6	33.3	49.0
Thread O.D. size		M16 x 1.5	M20 x 1.5	M25 x 1.5	M30 x 1.5	M32 x 1.5
Stroke absorption (mm)		4	7	8	8.5	13
Collision speed (m/s)		0.05 to 3				
Max. operating frequency (2) (cycle/min)		60	60	45	45	30
Max. allowable thrust (N)		294	490	686	981	1177
Ambient temperature (C°)		–10 to 80				
Spring force (N)	Extended	6.08	12.75	15.69	21.57	24.52
	Retracted	13.45	27.75	37.85	44.23	54.23
Mass (g)		28	60	110	182	240
Option/Stopper nut		RBQ16S	RB20S	RBQ25S	RBQ30S	RBQ32S

Note 1) The maximum energy absorption and maximum operating frequency are measured at room temperature (20 to 25°C).

Note 2) It denotes the values at the maximum energy absorption per one cycle. Therefore, the operating frequency can be increased according to the energy absorption.

How to Order

RB Q C 20 07 [ ]

- RB: Shock absorber
- Q: Short type
- C: Type

Nil	Basic type
C	With bumper

- 20 / 07: O.D. thread size/Stroke

Symbol	O.D. thread size	Stroke	Symbol	O.D. thread size	Stroke
1604	16 mm	4 mm	3009	30 mm	9 mm
2007	20 mm	7 mm	3212	32 mm	13 mm
2508	25 mm	8 mm			

- [ ]: Option

Symbol	Hex. nut	Stopper nut
Nil	2 pcs.	—
J	3 pcs.	—
N	—	—
S	2 pcs.	1 pc.
SJ	3 pcs.	1 pc.
SN	—	1 pc.

Bumper cannot be mounted for basic type. Please place an order with bumper type from the beginning.

Replacement part no./Bumper

RBQC 16 C

- 16: Applicable model
- C: Bumper

16	RBQC1604	30	RBQC3009
20	RBQC2007	32	RBQC3213
25	RBQC2508		

∗ 2 mounting hexagon nuts are attached as standard.

Construction

At impact

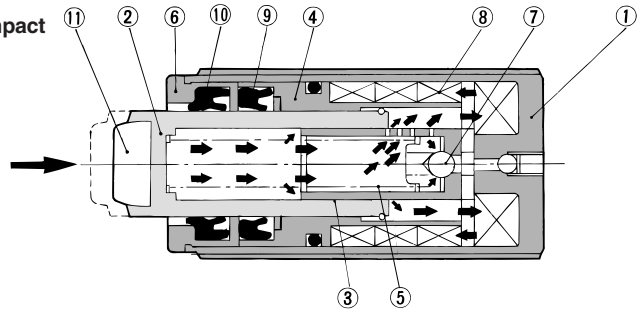

An impact object that strikes against the piston rod end pressurizes oil inside the piston. Thus, pressurized oil jets out through the orifice inside the piston, thereby generating hydraulic resistance to absorb the energy of the impacting object.
The oil jetted out through the orifice is collected inside the outer tube by means of the stretching action of the accumulator.

At returning

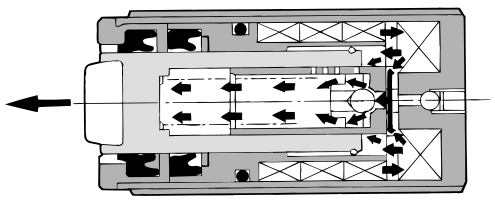

When the impact object is removed, the return spring pushes out the piston rod, and negative pressure, generated at the same time, opens the check ball to permit oil to return to the inside of the piston rod and the piston, making the shock absorber ready for the next impact.

Component Parts

No.	Description	Material	Treatment
1	**Outer tube**	Rolled steel	Black electroless nickel plated
2	**Piston rod**	Special steel	Heat treated, Hard chrome plated
3	**Piston**	Special steel	Heat treated
4	**Bearing**	Special bearing material	
5	**Return spring**	Piano wire	Zinc chromated
6	**Stopper**	Carbon steel	Zinc chromated

No.	Description	Material	Treatment
7	**Check ball**	Bearing steel	
8	**Accumulator**	Fluororubber	Foam rubber
9	**Rod seal**	NBR	
10	**Scraper**	NBR	
11	**Bumper**	Polyurethane	Only with bumper

Dimensions

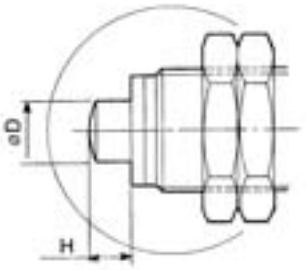

Series RBQ
Basic type

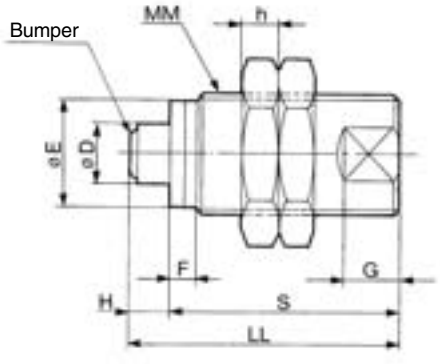

Series RBQC
With bumper

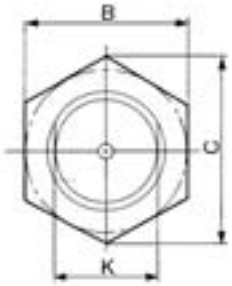

Model		Shock absorber									Hexagon nut		
Basic type	With bumper	**D**	**E**	**F**	**H**	**K**	**G**	**LL**	**MM**	**S**	**B**	**C**	**h**
RBQ1604	**RBQC1604**	6	14.2	3.5	4	14	7	31	M16 x 1.5	27	22	25.4	6
RBQ2007	**RBQC2007**	10	18.2	4	7	18	9	44.5	M20 x 1.5	37.5	27	31.2	6
RBQ2508	**RBQC2508**	12	23.2	4	8	23	10	52	M25 x 1.5	44	32	37	6
RBQ3009	**RBQC3009**	16	28.2	5	8.5	28	12	61.5	M30 x 1.5	53	41	47.3	6
RBQ3213	**RBQC3213**	18	30.2	5	13	30	13	76	M32 x 1.5	63	41	47.3	6

Hexagon Nut

(2 pcs. standard equipment)

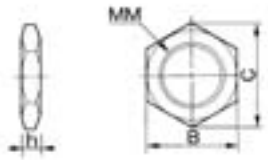

(mm)

Part no.	**MM**	**h**	**B**	**C**
RBQ16J	M16 x 1.5	6	22	25.4
RB20J (1)	M20 x 1.5	6	27	31.2
RBQ25J	M25 x 1.5	6	32	37
RBQ30J	M30 x 1.5	6	41	47.3
RBQ32J	M32 x 1.5	6	41	47.3

Note 1) In the case of RB20J, RB and RBQ are common.

Option

Stopper nut

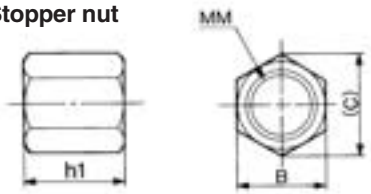

Material: Carbon steel (mm)

Part no.	**B**	**C**	**h1**	**MM**
RBQ16S	22	25.4	12	M16 x 1.5
RB20S(2)	27	31.2	16	M20 x 1.5
RBQ25S	32	37	18	M25 x 1.5
RBQ30S	41	47.3	20	M30 x 1.5
RBQ32S	41	47.3	25	M32 x 1.5

Note 2) In the case of RB20S, RB and RBQ are common.

Replacement Parts

Bumper

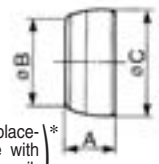

(These are the replacement part for the with bumper type. Not available for the basic type.) *

Material: Polyurethane (mm)

Part no.	**A**	**B**	**C**
RBQC16C	3.5	4	4.7
RBQC20C	4.5	8	8.3
RBQC25C	5	8.3	9.3
RBQC30C	6	11.3	12.4
RBQC32C	6.6	13.1	14.4

Shock Absorber: Short Type
Series RBQ
Technical Data:

Model Selection

Model Selection Step

1. Type of impact

- ☐ Cylinder stroke at load (Horizontal)
- ☐ Cylinder stroke at load (Downward)
- ☐ Cylinder stroke at load (Upward)
- ☐ Conveyor stroke at load (Horizontal)
- ☐ Free dropping impact
- ☐ Rotating impact (With torque)

2. Enumeration of operating conditions

Symbol	Operating conditions	Unit
m	Impacting object mass	kg
υ	Collision speed	m/sec
h	Dropping height	m
ω	Angle speed	rad/sec
R	Distance between axis of cylinder and impact point	m
d	Bore size	mm
p	Cylinder operating pressure	MPa
F	Thrust	N
T	Torque	N · m
n	Operation cycle	cycle/min
t	Ambient temperature	°C
μ	Friction coefficient	—

3. Specifications and operational instructions

Ensure that the collision speed, thrust, operation cycle, the ambient temperature and atmosphere fall within the specifications.

∗ Be aware of the min. installation radius in the case of rotating impacts.

4. Calculation of kinetic energy E_1

Using the equation suitable for the classification of impact.

In the case of cylinder stroke at load and free horizontal impact, substitute respective figures for **Data A** in order to calculate E_1.

5. Calculation of thrust energy E_2

Select any shock absorber as a provisional model.

In the case of thrust energy of cylinder E_2, substitute respective figures for **Data B** or **Data C**.

6. Calculation of corresponding mass of impacting object Me

Absorbed energy $E = E_1 + E_2$

Corresponding mass of impacting object $Me = \frac{2}{\upsilon^2} \cdot E$

Substitute both absorbed energy **E** and collision speed υ for **Data A** in order to calculate the corresponding mass of the impacting object **Me**.

7. Selection of applicable model

Taking into consideration the corresponding mass of the impacting object **Me**, calculated using **Data D** and collision speed υ, check provisional model compatibility with the condition of application. If this is satisfactory, then the said provisional model will be the applicable one.

Caution on Selection

In order for the shock absorbers to operate accurately for long hours, it is necessary to select a model that is well-suited to your operating conditions. If the impact energy is smaller than 5% of the maximum energy absorption, select a model that is one class smaller.

Selection Example

	Cylinder stroke at load (Horizontal)
1. Type of impact	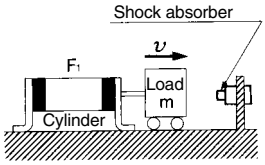
Collision speed (1) υ	υ
Kinetic energy E_1	$\frac{1}{2} \cdot m \cdot \upsilon^2$
Thrust energy E_2	$F_1 \cdot S$
Absorbed energy E	$E_1 + E_2$
Corresponding (2) mass of impacting object Me	$\frac{2}{\upsilon^2} \cdot E$
2. Operating conditions	m = 20 kg υ = 0.7 m/s d = 40 mm p = 0.5 MPa n = 30 cycle/min t = 25 °C
3. Specifications and operational instructions	● **Confirmation of specifications** υ ··· 0.7 < 3 (max.) **t** ··· –10 (min.) < 25 < 80 (max.) **F** ··· **F1** ··628 < 686 (max.) **YES**
4. Calculation of kinetic energy E_1	● **Kinetic energy E_1** Use Formula to calculate E_1. Suitable 20 for **m** and 0.7 for υ. **$E_1 \cong 4.9$ J**
5. Calculation of thrust energy E_2	● **Thrust energy E_2** Provisionally select a model RBQ2508 and make the use of **Data B**. According to **d = 40**, E_2 is obtained. **$E_2 \cong 5.0$ J**
6. Calculation of corresponding mass of impacting object Me	● **Corresponding mass of impacting object Me** Use the formula "Absorbed energy **E = E1 + E2 = 4.9 + 5.0 = 9.9 J**" to calculate **Me**. Substitute 9.9 J for **E** and **0.7** for υ. **Me ≅ 40 kg**
7. Selection of applicable model	● **Selection of applicable model** According to **Data D**, the tentatively selected RBQ2508 satisfies **Me** = 40 kg < 60 kg at υ = 0.7. Ultimately, it will result in an operating frequency of **n**···30 < 45, without causing a problem. **YES** **Select RBQ2508**

1. Type of Impact

	Cylinder stroke at load (Downward)	
Type of impact	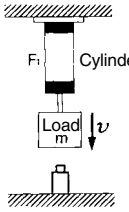	
Collision speed (1) υ	υ	
Kinetic energy E_1	$\frac{1}{2} \cdot m \cdot \upsilon^2$	
Thrust energy E2	$F_1 \cdot S + m \cdot g \cdot S$	
Absorbed energy E	$E_1 + E_2$	
Corresponding (2) mass of impacting object Me	$\frac{2}{\upsilon^2} \cdot E$	

Note 1) Collision speed is momentary velocity at which object is impacting against shock absorber.
The collision speed is $\upsilon = 2\overline{\upsilon}$ when the speed (average speed $\overline{\upsilon}$) is calculated from the air cylinder's stroke time.

Data A

Kinetic Energy E_1 or Energy Absorption E

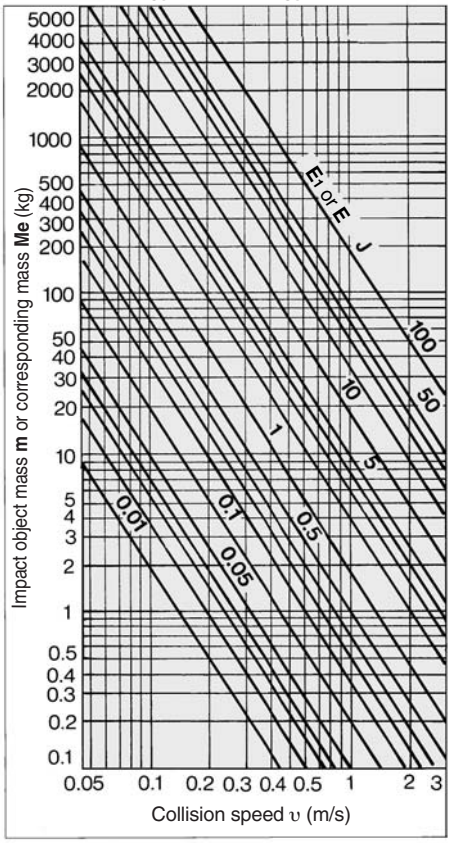

SMC

	Cylinder stroke at load (Upward)	Conveyor stroke at load (Horizontal)	Free dropping impact	Rotating impact (With torque)
	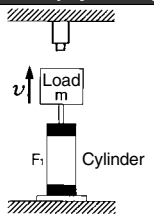	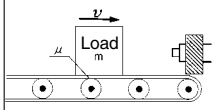	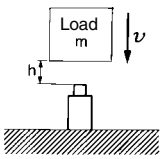	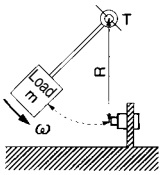
	υ	υ	$\sqrt{2gh}$	$\omega \cdot R$
	$\frac{1}{2} \cdot m \cdot \upsilon^2$	$\frac{1}{2} \cdot m \cdot \upsilon^2$	$m \cdot g \cdot h$	$\frac{1}{2} \cdot I \cdot \omega^2$
	$F_1 \cdot S - m \cdot g \cdot S$	$m \cdot g \cdot \mu \cdot S$	$m \cdot g \cdot S$	$T \cdot \frac{S}{R}$
	$E_1 + E_2$	$E_1 + E_2$	$E_1 + E_2$	$E_1 + E_2$
	$\frac{2}{\upsilon^2} \cdot E$	$\frac{2}{\upsilon^2} \cdot E$	$\frac{2}{\upsilon^2} \cdot E$	$\frac{2}{\upsilon^2} \cdot E$

Note 2) An "Impact body equivalent mass" is the mass of an impact object without involving thrust, into which an object's total energy has been converted. Hence, $E = \frac{1}{2} \cdot Me \cdot \upsilon^2$

Note 3) For the formula of moment of inertia I (kg·m²), refer to the catalog of rotary actuator.

Symbol

Symbol	Specifications	Unit
d	Bore size	mm
E	Absorbed energy	J
E_1	Kinetic energy	J
E_2	Thrust energy	J
F_1	Cylinder thrust	N
g	Acceleration of gravity (9.8)	m/s²
h	Dropping height	m
I (3)	Moment of inertia around the center of gravity	kg·m²
n	Operating frequency	cycle/min
p	Cylinder operation pressure	MPa
R	Distance between axis of cylinder and impact point	m
S	Shock absorber stroke	m
T	Torque	N·m
t	Ambient temperature	°C
υ	Collision speed	m/s
m	Impact object mass	kg
Me	Corresponding mass of impact object	kg
ω	Angle speed	rad/s
μ	Friction coefficient	—

Data B

Thrust Energy of Cylinder $F_1 \cdot S$ (Operating pressure 0.5 MPa) (J)

Model		RBQ□1604	RBQ□2007	RBQ□2058	RBQ□3009	RBQ□3213
Stroke absorption (mm)		4	7	8	8.5	13
Bore size d (mm)	6	0.057	0.099	0.113	0.120	0.184
	10	0.157	0.274	0.314	0.334	0.511
	15	0.353	0.619	0.707	0.751	1.15
	20	0.628	1.10	1.26	1.34	2.04
	25	0.982	1.72	1.96	2.09	3.19
	32	1.61	2.81	3.22	3.42	5.23
	40	2.51	4.40	5.03	5.34	8.17
	50	3.93	6.87	7.85	8.34	12.8
	63	6.23	10.9	12.5	13.2	20.3
	80	10.1	17.6	20.1	21.4	32.7
	100	15.7	27.5	31.4	33.4	51.1
	125	24.5	43.0	49.1	52.2	79.8
	140	30.8	53.9	61.6	65.4	100
	160	40.2	70.4	80.4	85.5	131
	180	50.9	89.1	102	108	165
	200	62.8	110	126	134	204
	250	98.2	172	196	209	319
	300	141	247	283	300	459

■ Operating pressure other than 0.5 MPa: Multiply by the following coefficient.

Operating pressure (MPa)	1	0.2	0.3	0.4	0.5	0.6	0.7	0.8	0.9
Coefficient	0.2	0.4	0.6	0.8	1.0	1.2	1.4	1.6	1.8

Data C

Thrust Energy at Load m · g · s

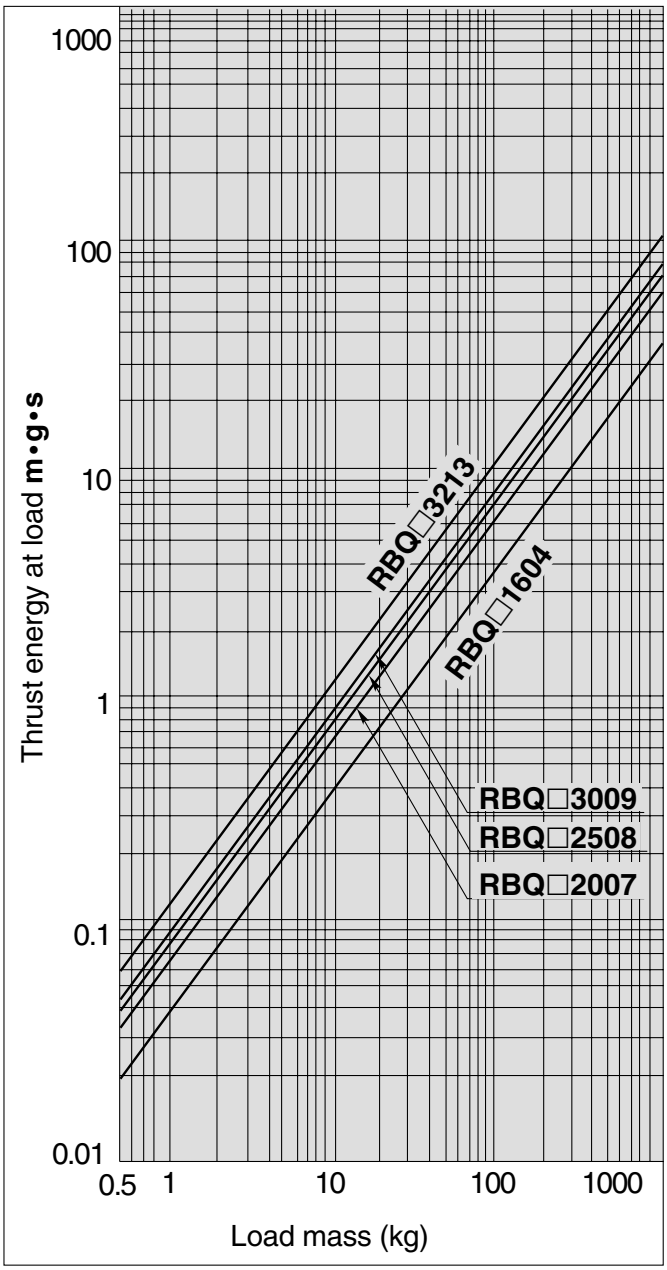

Data D

Corresponding Mass of Impacting Object Me

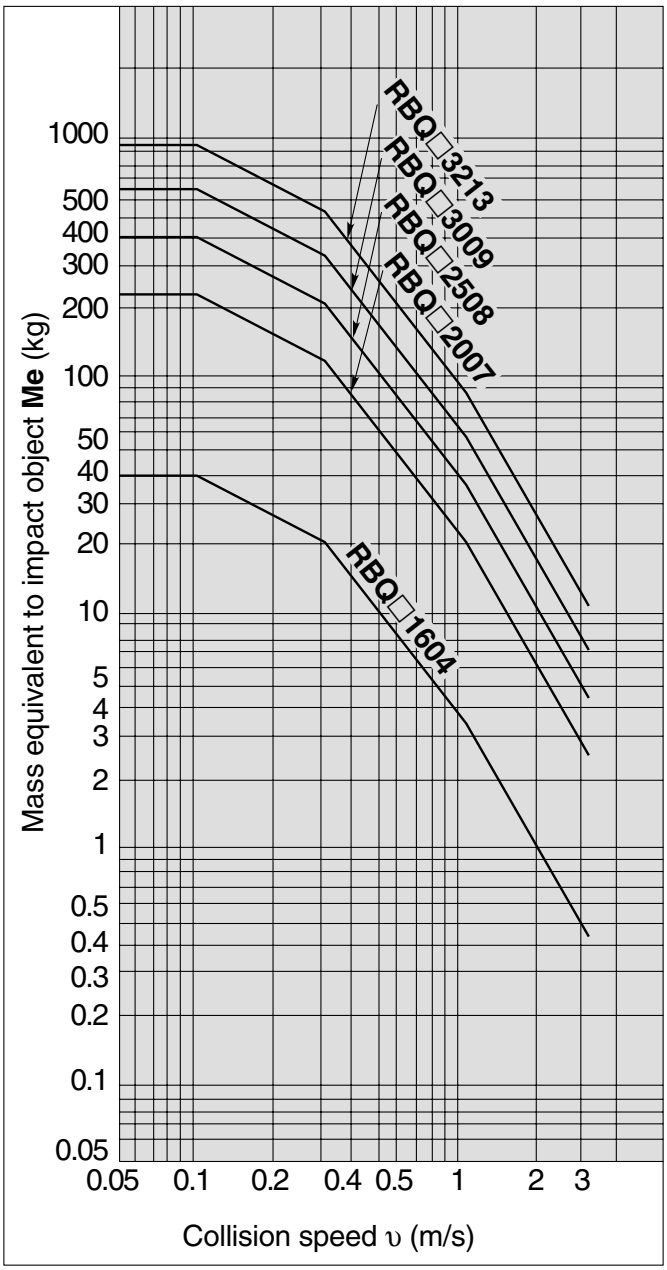

The corresponding mass graph shows the values at room temperature (20 to 25 °C).

Series RBQ
Specific Product Precautions 1

Be sure to read before handling.
Refer to front matters 42 and 43 for Safety Instructions.

Selection

⚠ Danger

1. Energy absorption

Select a model so that the aggregated energy of impact object should not exceed the maximum absorption energy. Otherwise, it could cause changes in properties or result in damaging the shock absorber.

2. Corresponding mass of impacting object

Make a model selection, so that the corresponding mass of impacting object does not exceed the allowable range. Pulsation will occur in buffer and deceleration force, thus making it difficult to absorb shock smoothly.

3. Collision speed

Use it in the conditions that collision speed is within the specified range. It could cause the changes in buffer characteristics or lead to damage a shock absorber.

⚠ Warning

1. Static load

Design the system, so that any other forces than the buffer capacity or impacts should not be applied to the piston rod which is stopped at the retracted state.

⚠ Caution

1. Maximum operating frequency

Design the system in the conditions under which it is not used at the frequency exceeding the specified maximum operating frequency. (But, the maximum operating frequency will vary depending on the absorbed energy.)

2. Stroke

The maximum absorption energy in the specifications cannot be exerted unless the full stroke is used.

3. Work surface of an impact object

The contact surface of the impact object with which the piston rod comes into contact must be highly rigid.

In the case without a cap, a high surface compression load is applied to the contact surface of the impact body with which the piston rod comes into contact. Therefore, the contact surface must be highly rigid (hardness of HRC35 or more).

4. Be aware of the return force of the impact object.

If used in a conveyor drive, after the shock absorber has absorbed energy, it could be pushed back by the spring that is built-in. For the spring force in the specifications, refer to the column (page 1688).

5. Selection of size

As the number of operation proceeds, the maximum absorption energy of shock absorbers will be decreased by the following reasons such as abrasion, or deterioration, etc. of the internal working fluid. Taking this into consideration, selecting a size which is 20 to 40% affordable against the amount of absorption energy is recommended.

⚠ Caution

6. Drag characteristics

In general, the values of drag (reactive force generated during operation) generated by the operating speed will vary in hydraulic shock absorber. And then, by adopting “Porous orifice construction”, the RB series can adapt to such this fast/slow speed and can absorb shock smoothly in a wide range of speed.

But, the speed reduction (speed reduction G) would be larger around the stroke terminal, depending upon the operating conditions. Please note that it might be encountered that stroke time is long, motion is not smooth, etc. If this would be a problem, we recommend that stroke amount should be restricted by using our optional component like “Stopper nut”, etc.

7. Parallel usage

When using multiple shock absorbers in parallel, energy will not be divided evenly because of differences in product dimensions and devices. For this reason, select the following options.

E = Ea/N/0.6

E : Energy used per shock absorber

Ea: All energies

N : The number of shock absorbers used in parallel

Operating Environment

⚠ Danger

1. Operation in an environment which requires explosion-proof

- When mounting in places where static electricity is accumulated, implement a distribution of electrical energy by grounding.
- Do not use the materials for buffer face which might cause to spark by collision.

⚠ Warning

1. Pressure

Do not use it in the vacuum state, which is substantially different from the atmospheric pressure (above sea level) and in the atmosphere under being pressurized.

2. Using inside a clean room

Do not use the shock absorber in a clean room, as it could contaminate the clean room.

⚠ Caution

1. Temperature range

Do not use it, exceeding the specified allowable temperature range. Seal could be softened or hardened or worn out, or leading to leak a working fluid, deterioration, or impact characteristic changes.

2. Deterioration by atmosphere

Do not use the product in an environment where the product may be damaged by salt or air which contains organic solvent, phosphoester operating oil, sulfurous acid gas, chlorine gas or other acids. It may deteriorate seals or corrode metals.

Series RBQ
Specific Product Precautions 2

Be sure to read before handling.
Refer to front matters 42 and 43 for Safety Instructions.

Operating Environment

⚠ Caution

3. Deterioration by ozone

Do not use it under the direct sunlight on the beach, or by the mercury lamp, or the ozone generator, because the rubber material will be deteriorated by ozone.

4. Cutting oil, water, blown dust

Do not use the product under the condition, where the liquid such as cutting oil, water, solvent, etc. is exposed either directly or in atomized form to the piston rod, or where blown dust could be adhered around the piston rod. This could cause malfunction.

5. Vibration

When vibrations are applied on impact objects, implement a secure guide on impact objects.

Mounting

⚠ Warning

1. Before performing installation, removal, or stroke adjustment, make sure to cut the power supply to the equipment and verify that the equipment has stopped.

2. Installation of protective cover

We recommend the protective cover should be installed in the case workers might be getting close during the operation.

3. The rigidity of the mounting frame

The mounting frame must have sufficient rigidity.

Load on mounting plate can be calculated as follows.

$$\text{Load on mounting plate} \quad N \cong 2\frac{E\ (\text{Absorbed energy : J})}{S\ (\text{Stroke : m})}$$

Depending on the impact conditions, a load applied to the mounting frame may exceed the calculated value.

When setting the rigidity of the mounting frame, the sufficient safety ration must be taken into account in the calculated value.

⚠ Caution

1. Tightening torque of mounting nut should be as follows.

When threading on a mounting frame in order to mount a shock absorber directly, prepared hole dimensions are referred to the table below.

For tightening torque of a nut for shock absorber, kindly abide by the table below.

If the tightening torque that is applied to the nut exceeds the value given below, the shock absorber itself could become damaged.

Model	RBQ(C)1604	RBQ(C)2007	RBQ(C)2508	RBQ(C)3009	RBQ(C)3213
O.D. thread (mm)	M16 x 1.5	M20 x 1.5	M25 x 1.5	M30 x 1.5	M32 x 1.5
Thread prepared bore (mm)	ø14.7 $^{+0.1}_{0}$	ø18.7 $^{+0.1}_{0}$	ø23.7 $^{+0.1}_{0}$	ø28.7 $^{+0.1}_{0}$	ø30.7 $^{+0.1}_{0}$
Tightening torque (N · m)	14.7	23.5	34.3	78.5	88.3

Mounting

⚠ Caution

2. Deviation of impact.

The installation must be designed so that the impact body is perpendicular to the shock absorber's axial center. An angle of deviation that exceeds 5° will place an excessive load on the bearings, leading to oil leaks within a short period of operation.

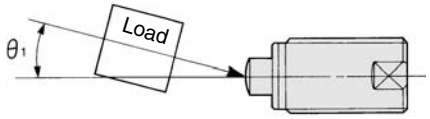

Allowable eccentric angle $\theta_1 \leq 5°$

3. Rotating angle

If rotating impacts are involved, the installation must be designed so that the direction in which the load is applied is perpendicular to the shock absorber's axial center. The allowable rotating eccentric angle until the stroke end must be $\theta_2 \leq 5°$.

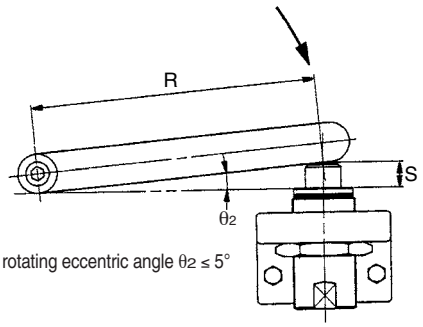

Allowable rotating eccentric angle $\theta_2 \leq 5°$

Installation Conditions for Rotating Impact (mm)

Model	S (Stroke)	θ2 (Allowable rotating angle)	R (Min. installation radius)
RBQ□1604	4	5°	46
RBQ□2007	7		80
RBQ□2508	8		92
RBQ□3009	8.5		98
RBQ□3213	13		149

4. Do not scratch the sliding portion of the piston rod or the outside threads of the outer tube.

Failure to observe this precaution could scratch or gouge the sliding potion of the piston rod, or damage the seals, which could lead to oil leakage and malfunction. Furthermore, damage to outside threaded portion of the outer tube could prevent the shock absorber from being mounted onto the frame, or its internal components could deform, leading to a malfunction.

5. Never turn the screw on the bottom of the body.

This is not an adjusting screw. Turning it could result in oil leakage.

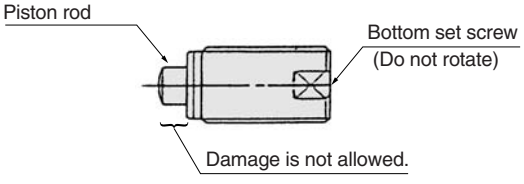

Series RBQ
Specific Product Precautions 3

Be sure to read before handling.
Refer to front matters 42 and 43 for Safety Instructions.

Mounting

⚠ Caution

6. Adjust the stopping time through the use of the stopper nut, as follows:

Control the stopping time of the impact object by turning the stopper nut in or out (thus changing length "a"). After establishing the stopper nut position, use a hexagon nut to secure the stopper nut in place.

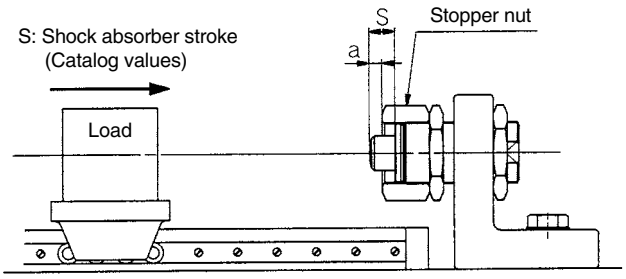

Maintenance

⚠ Caution

1. Check the mounting nut is not loosen.

The shock absorber could become damaged if it is used in a loose state.

2. Pay attention to any abnormal impact sounds or vibrations.

If the impact sounds or vibrations have become abnormally high, the shock absorber may have reached the end of its service life. If this is the case, replace the shock absorber. If use is continued in this state, it could lead to equipment damage.

3. Confirm that abnormality, oil leakage, etc. in the outward surface.

When a large amount of oil is leaking, replace the product, because it is believed to be happening something wrong with it. If it keeps on using, it may cause to break the equipment which is mounted by this product.

4. Inspect the bumper for any cracks or wear.

If the shock absorber comes with a bumper, the damper could wear first. To prevent bumper to the impact object, replace the bumper often.

5. How to replace bumper

The bumper inserted into the piston rod can be removed easily by a small screwdriver. When reassembling, push the smaller end of the bumper inside the piston.

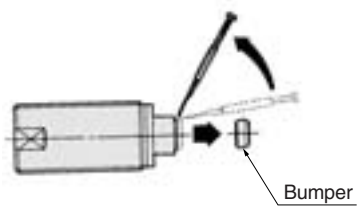

Storage

⚠ Caution

1. Piston rod position while stored

If a piston rod is stored as pushed in for a long period of time (over 30 days), absorption capacity may decrease.
Avoid storing like this for a long time.

Service Life and Replacement Period of Shock Absorber

⚠ Caution

1. Allowable operating cycle under the specifications set in this catalog is shown below.

2 million cycles

Note) Specified service life (suitable replacement period) is the value at room temperature (20 to 25°C). The period may vary depending on the temperature and other conditions. In some cases the absorber may need to be replaced before the allowable operating cycle above.