Series CBQ2

ø20, ø25, ø32, ø40
ø50, ø63, ø80, ø100

Replacement Procedure is P.290

Construction

ø32 to ø63

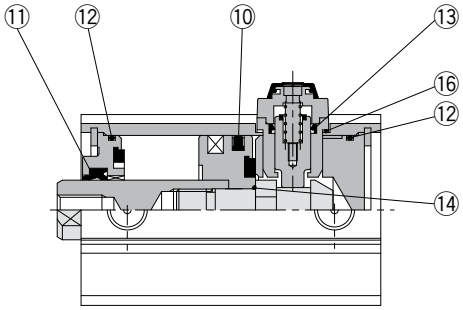

Head end lock

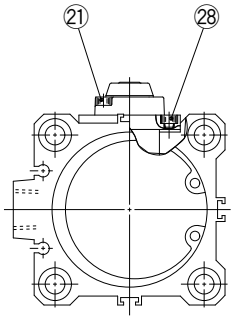

Cylinder tube form ø32 to ø63

∗ The numbers are the same as the "Construction" of the CQ2 series catalog (CAT.ES20-205).

Seal Kit List

No.	Description	Material	Note
⑩	**Piston seal**	NBR	
⑪	**Rod seal**	NBR	
⑫	**Tube gasket**	NBR	Using 4 pcs. for ø80, ø100
⑬	**Lock piston seal**	NBR	
14	**Piston gasket**	NBR	Nothing for ø20, ø25
⑯	**Gasket**	NBR	
㉑	Hexagon socket head cap screw	Alloy steel	Black zinc chromated
㉘	Hexagon socket head cap screw	Alloy steel	Nickel plated

14 is a non-replaceable part, so it is not included in the seal kit.

*BLUE links will lead to purchase pages.

Replacement Parts: Seal Kit

Bore size (mm)	Kit no.	Contents
End lock type		
20	CBQ2B20-PS	Set of left nos. ⑩, ⑪, ⑫, ⑬, ⑯, ㉑, ㉘ and a grease pack.
25	CBQ2B25-PS	
32	CBQ2B32-PS	
40	CBQ2B40-PS	
50	CBQ2B50-PS	
63	CBQ2B63-PS	
80	CBQ2B80-PS	
100	CBQ2B100-PS	

∗ Seal kit includes ⑩, ⑪, ⑫, ⑬, ⑯, ㉑, ㉘. Order the seal kit, based on each bore size.
∗ Since the seal kit does not include a grease pack, order it separately.
Grease pack part no.: GR-S-010 (10 g)